© DEN HARTOG INDUSTRIES, INC.

Copyright. All information furnished within this document, electronic file or design correspondence is the property of Den Hartog Industries, Inc. and shall not be used, disclosed to others or copied without the expressed written consent of Den Hartog Industries, Inc.

VT0225-31 B

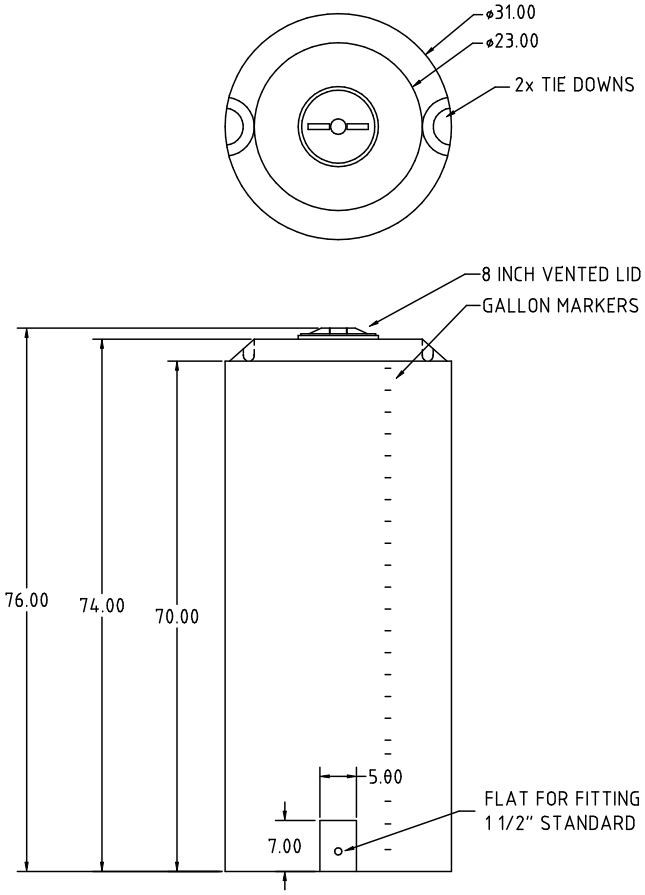

REV	DESCRIPTION	DATE	APPRD.
B	ADDRESS ADDED CCN 1855 ADH 5-5-09		
A	ADDED DIM. 76.00 8-26-05/NVE		

DRAWN /DATE: DHJ 5/1/03

APPRD. /DATE: ADH 11/19/07

MATERIAL / SHOT WEIGHT: HDPE / 65 LBS.

ALL DIMENSIONS ARE IN DECIMAL INCHES
TOLERANCES UNLESS OTHERWISE SPECIFIED
± 1% @ 68 F

THIRD ANGLE PROJECTION
ANSI 14.5M

NOTES:
1. NOM. WALL .250
2. BLACK, WHITE, OR YELLOW COLOR

Ace Roto-Mold
A DIVISION OF DEN HARTOG INDUSTRIES, INC.
4010 HOSPERS DRIVE S. BOX 425, HOSPERS, IOWA 51238-0421 Ⓑ

CLIENT / DESCRIPTION: 225 GALLON VERTICAL

SCALE: NONE

PART NO.: VT0225-31

This document contains proprietary information. It is intended solely for the information and use of potential clients involved or to be involved in a transaction with BARR Plastics. Such proprietary information may not be used, reproduced, or disclosed to any other parties for any other purpose without the expressed written permission.