REVISION HISTORY			
REV	DESCRIPTION	DATE	AUTHOR

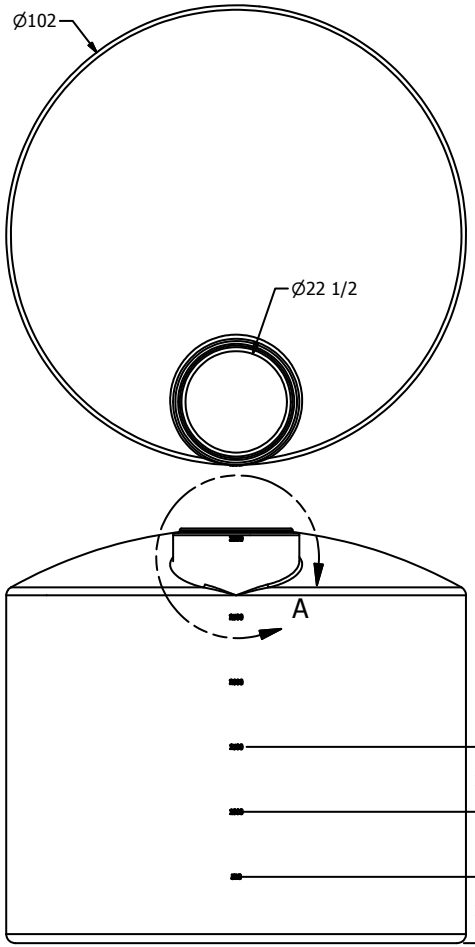

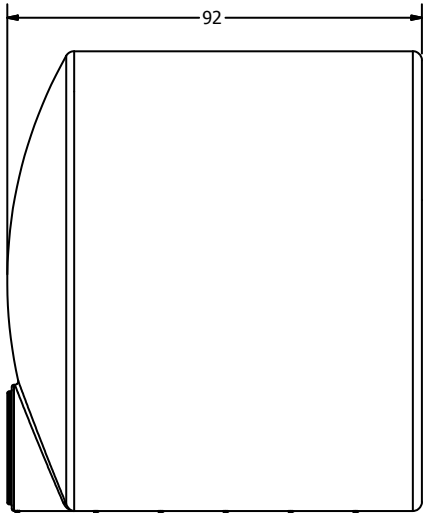

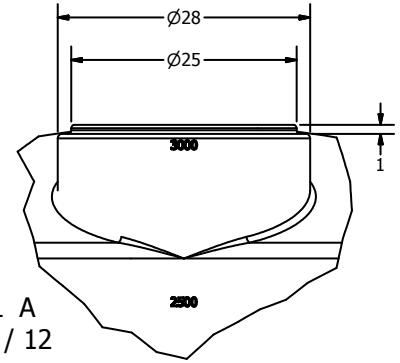

DETAIL A
SCALE 1 / 12

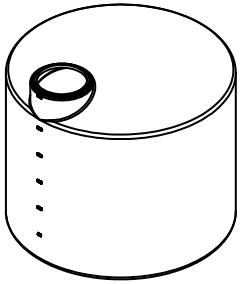

DRAWN Jerry Paulson	8/6/2009	BARR Plastics Inc. 1.800.665.4499 www.barrplastics.com
CHECKED		TITLE: 3000 GALLON VERTICAL TANK X 102 DIAMETER
QA		
MFG		
APPROVED		SIZE B / DWG NO / REV
		SCALE: 1/24 / SHEET 1 OF 1

This document contains proprietary information. It is intended solely for the information and use of potential clients involved or to be involved in a transaction with BARR Plastics. Such proprietary information may not be used, reproduced, or disclosed to any other parties for any other purpose without the expressed written permission.