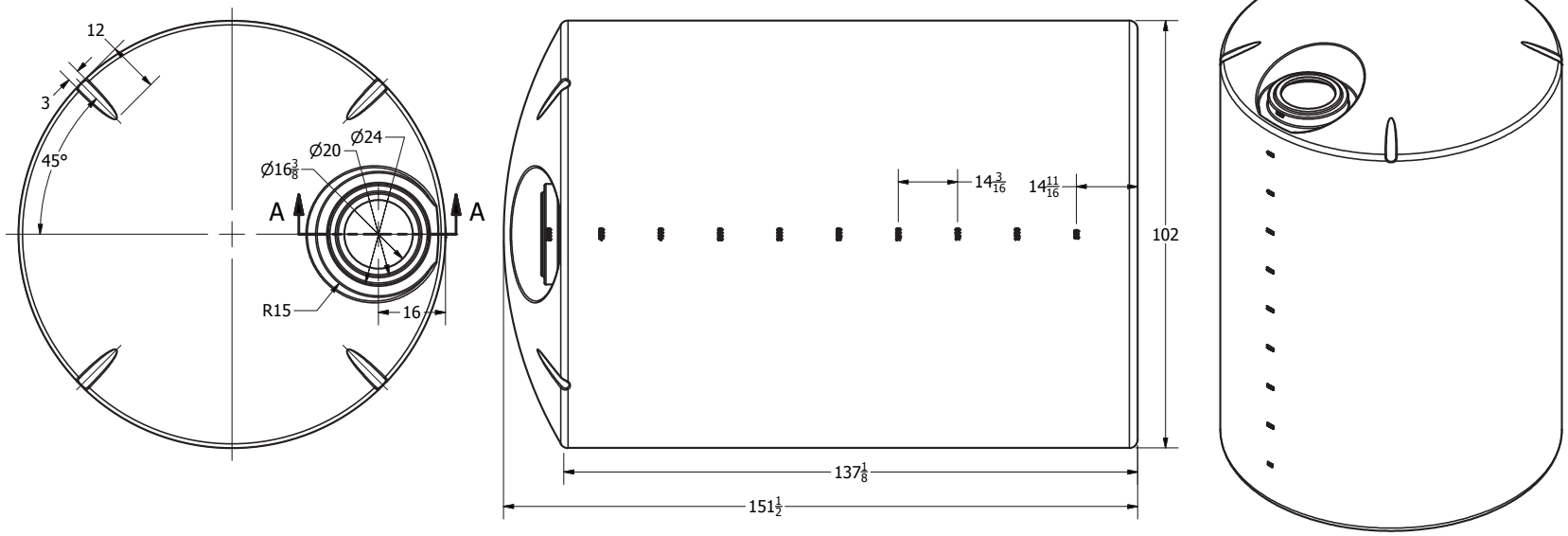

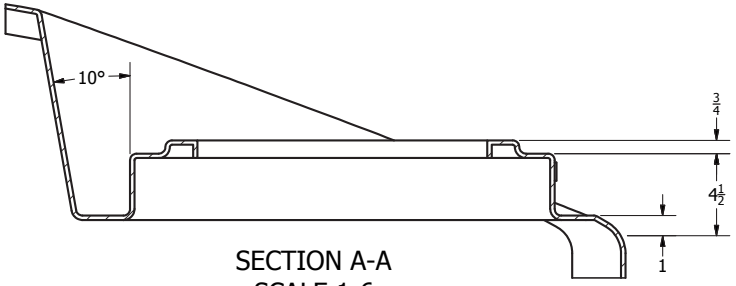

SECTION A-A
SCALE 1:6

REVISION HISTORY			
REV	DESCRIPTION	DATE	AUTHOR
A	REDRAWN	8/14/1997	
B	REDRAWN	7/16/2013	Michael Holden

DRAWN Jerry Paulson	8/14/1997	NORWESCO, INC. SAINT BONIFACIUS, MN
CHECKED		TITLE
QA		5000 GALLON VERTICAL STORAGE TANK
MFG		
APPROVED		SIZE B / DWG NO / REV B
		SCALE: 1/16 / SHEET 1 OF 1

This document contains proprietary information. It is intended solely for the information and use of potential clients involved or to be involved in a transaction with BARR Plastics. Such proprietary information may not be used, reproduced, or disclosed to any other parties for any other purpose without the expressed written permission.