REVISIONS				
ZONE	REV	DESCRIPTION	DATE	APPROVED
	B	REDRAWN	02JAN97	

barrplastics.com
1-800-665-4499

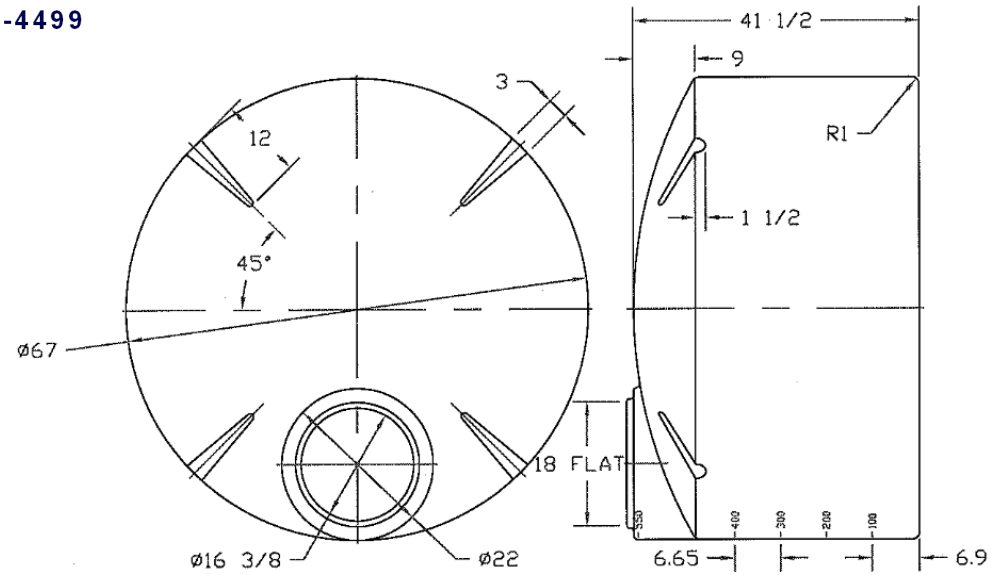

NORWESCO
ST. BONIFACIUS, MN

550 GALLON VERTICAL TANK

JTP 02JAN97	SIZE B	FSCM NO.	DWG NO.	REV B
	SCALE 1/16		SHEET	

This document contains proprietary information. It is intended solely for the information and use of potential clients involved or to be involved in a transaction with BARR Plastics. Such proprietary information may not be used, reproduced, or disclosed to any other parties for any other purpose without the expressed written permission.