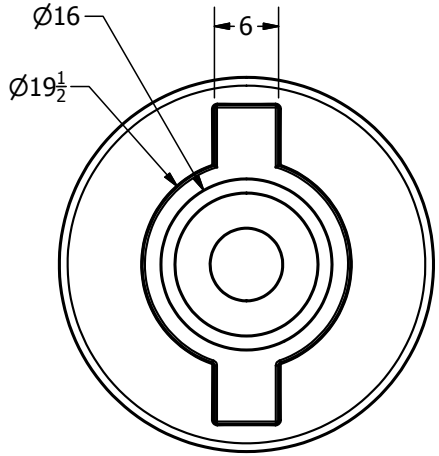

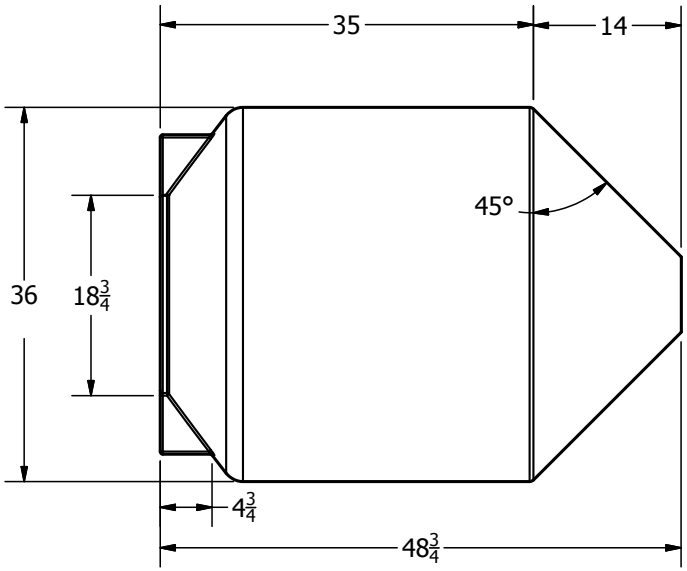

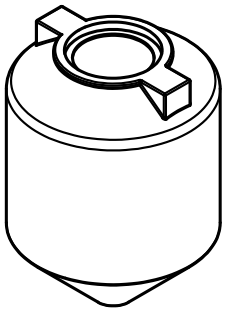

DRAWN Todd Bolzer	1/29/2013	NORWESCO, INC. SAINT BONIFACIUS, MN
CHECKED		TITLE
QA		160 GALLON CONE BOTTOM TANK FLAT BOTTOM W/O STAND
MFG		
APPROVED		SIZE A / DWG NO / REV
		SCALE: 1/16 / SHEET 1 OF 1

This document contains proprietary information. It is intended solely for the information and use of potential clients involved or to be involved in a transaction with BARR Plastics. Such proprietary information may not be used, reproduced, or disclosed to any other parties for any other purpose without the expressed written permission.