NORWESCO
ST. BONIFACIUS, MN

REV

750 USG (2839 LTRS)
CONE BTM TANK

WT. (LBS)	DWG NO.
169.3	**40811** W/2" FTG.
168.4	**40812** W/O FTG.

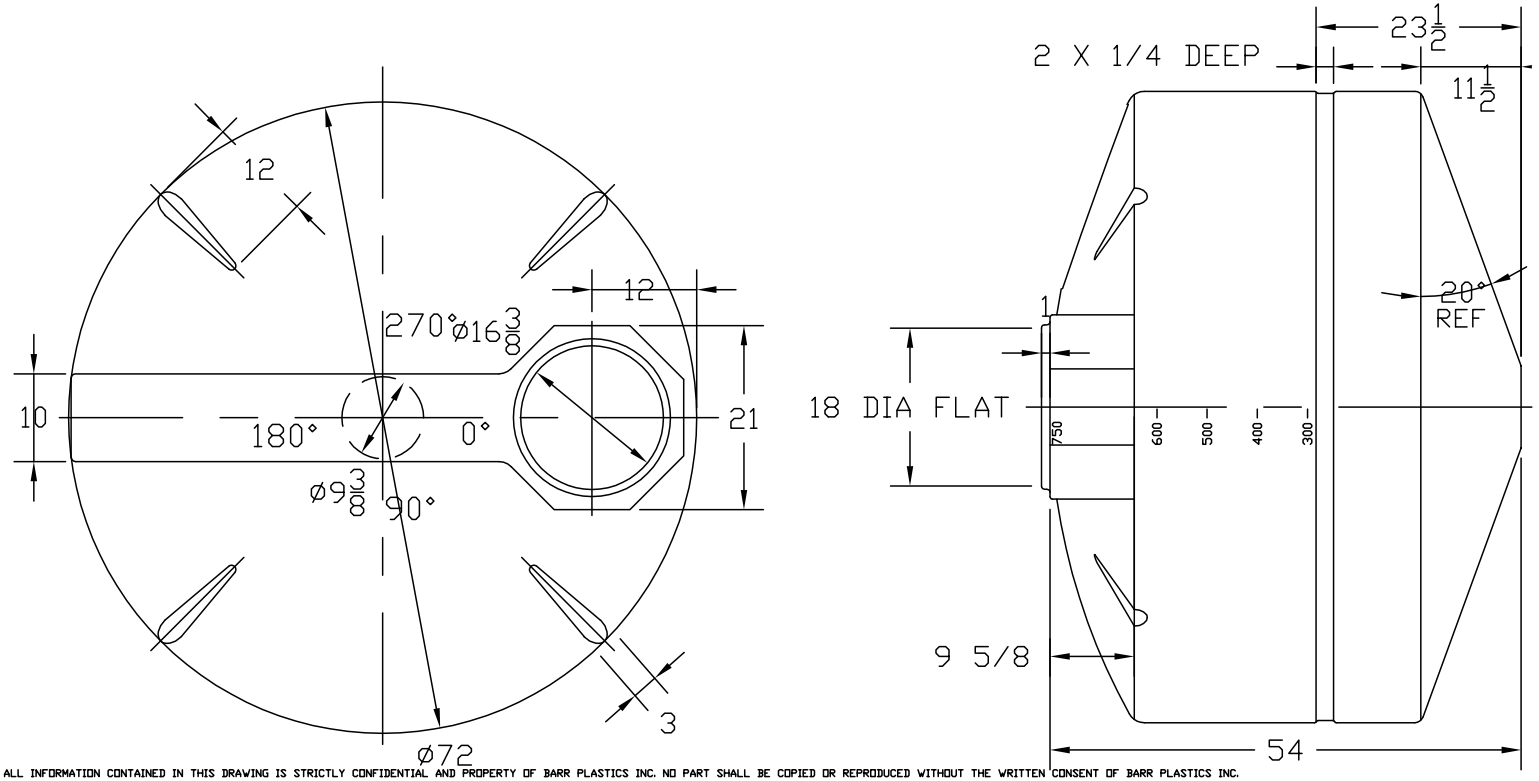

ALL INFORMATION CONTAINED IN THIS DRAWING IS STRICTLY CONFIDENTIAL AND PROPERTY OF BARR PLASTICS INC. NO PART SHALL BE COPIED OR REPRODUCED WITHOUT THE WRITTEN CONSENT OF BARR PLASTICS INC.

Customer Drawing Approval

Customer _____

Barr Plastic Inc. _____

H:\BPT SALES DWG\TANKS Norwesco_Snyder_Ace\Norwesco\Cone Bottom Tanks\750.DWG

BARR Plastics Inc.

DATE: 18 AUG 05

PROJECT: – TANK APPROVAL DWG

CLIENT: –

DRAWING REF:

SCALE: –

REV:

MATERIAL SPECIFICATIONS

HDPE 1.5 SPG

ALL FITTINGS ARE POLYPROPYLENE WITH EPDM GASKETS

This document contains proprietary information. It is intended solely for the information and use of potential clients involved or to be involved in a transaction with BARR Plastics. Such proprietary information may not be used, reproduced, or disclosed to any other parties for any other purpose without the expressed written permission.