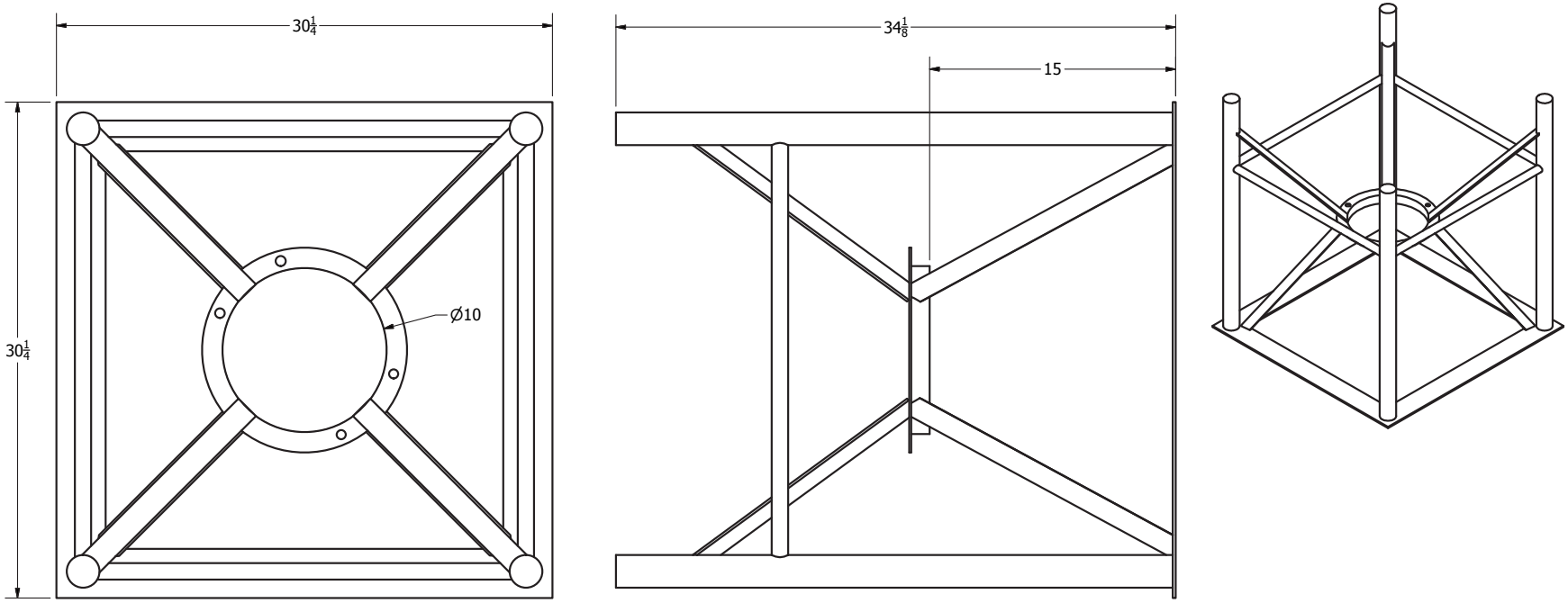

DRAWN Michael Holden	7/11/2013	NORWESCO, INC. SAINT BONIFACIUS, MN
CHECKED		TITLE
QA		Steel Stand - Cone Bottom, 160-45 degree
MFG		
APPROVED		SIZE B / DWG NO 63932 / REV
		SCALE: 1/16 / SHEET 1 OF 1

This document contains proprietary information. It is intended solely for the information and use of potential clients involved or to be involved in a transaction with BARR Plastics. Such proprietary information may not be used, reproduced, or disclosed to any other parties for any other purpose without the expressed written permission.