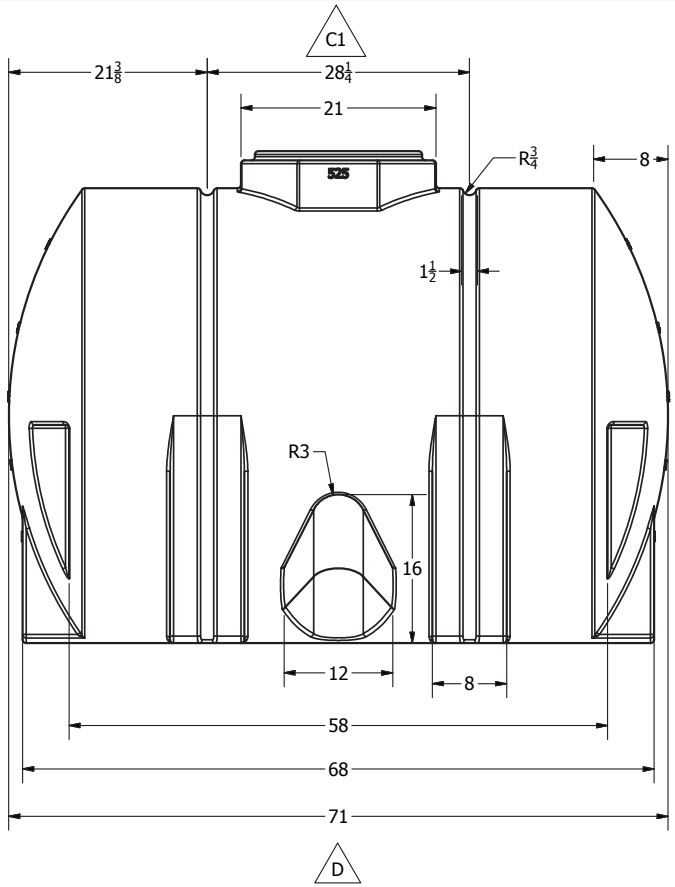

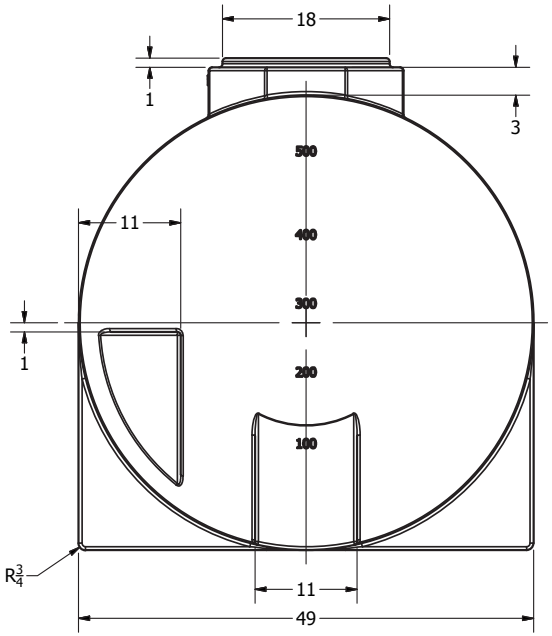

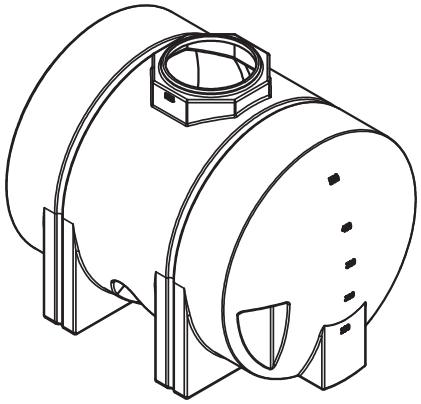

REVISION HISTORY			
REV	DESCRIPTION	DATE	AUTHOR
C	REDRAWN	2/10/1997	
C1	CORRECTED, WAS 27-1/2	9/23/2002	
D	WAS 72 1/2	12/3/2004	
E	REDRAWN	7/12/2013	Michael Holden

DRAWN Jerry Paulson	2/10/1997	NORWESCO, INC. SAINT BONIFACIUS, MN
CHECKED		TITLE
QA		525 GALLON HORIZONTAL TANK
MFG		
APPROVED		SIZE B / DWG NO / REV E
		SCALE: 1/16 / SHEET 1 OF 2

This document contains proprietary information. It is intended solely for the information and use of potential clients involved or to be involved in a transaction with BARR Plastics. Such proprietary information may not be used, reproduced, or disclosed to any other parties for any other purpose without the expressed written permission.