© DEN HARTOG INDUSTRIES, INC.

Copyright. All information furnished within this document, electronic file or design correspondence is the property of Den Hartog industries, Inc. and shall not be used, disclosed to others or copied without the expressed written consent of Den Hartog Industries, Inc.

HE0400-57

A

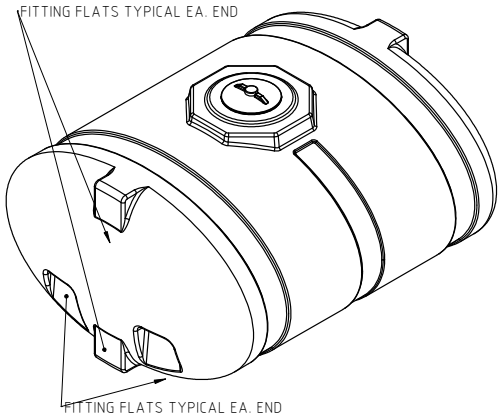

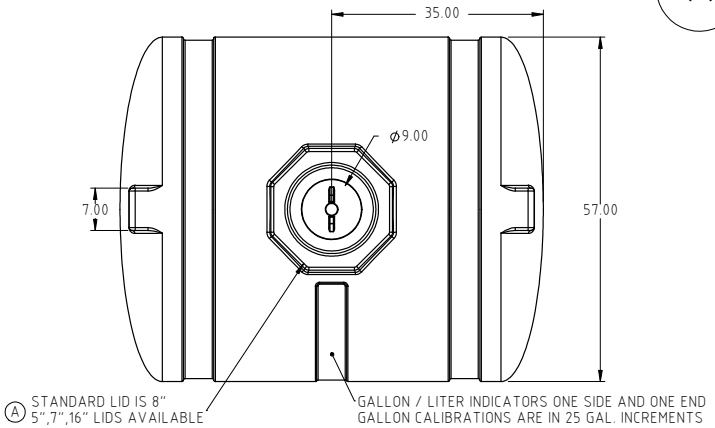

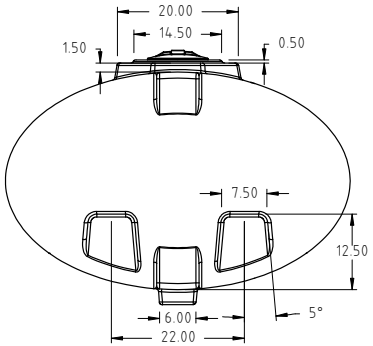

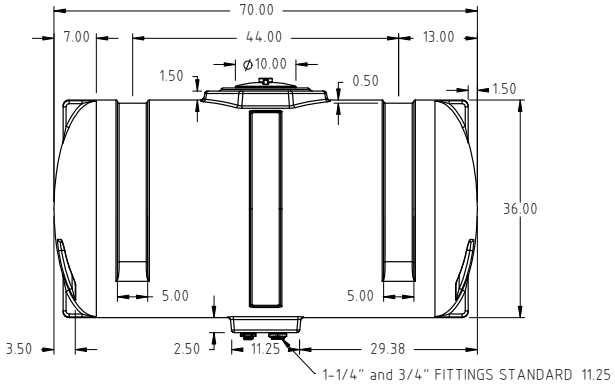

REV	DESCRIPTION	BY / DATE	CCN
A	5",7",16" LID OPTIONS ADDED TO NOTE DRWAING TEMPLATE UPDATED	ADH 5/7/12	2416

ALL DIMENSIONS ARE IN DECIMAL INCHES
TOLERANCES UNLESS OTHERWISE SPECIFIED

POLYETHYLENE: ±1% @ 68° F

METAL: DECIMAL ± .125" FRACTION ± 1/4" ANGLE ± 1°

THIRD ANGLE PROJECTION ANSI 14.5M

DRAWN / DATE: REH/4/16/01

APPRD. / DATE: DHJ/4/16/01

SHOT WEIGHT: 127.00 LBS

SHIPPING WEIGHT: 129.00 LBS

FINISH:

MATERIAL: 10420

NOTES: 1.) .300 NOMINAL WALL

Den Hartog INDUSTRIES, INC.

Ace Roto-Mold Injection Molding Blow Molding Sowjoy

4010 HOSPERS DRIVE S. BOX 425, HOSPERS, IOWA 51238-0425

DESCRIPTION: 400 GALLON ELLIPTICAL TANK

SCALE: N.S.

PART NO.: HE0400-57

This document contains proprietary information. It is intended solely for the information and use of potential clients involved or to be involved in a transaction with BARR Plastics. Such proprietary information may not be used, reproduced, or disclosed to any other parties for any other purpose without the expressed written permission.