PAINT SKID WELDMENT BLACK

REVISIONS				
ZONE	REV	DESCRIPTION	DATE	APPROVED
	C	REDRAWN, R WAS 61 29/32	18MAR02	
	D	BAND REVISED & REDRAWN	09APR09	

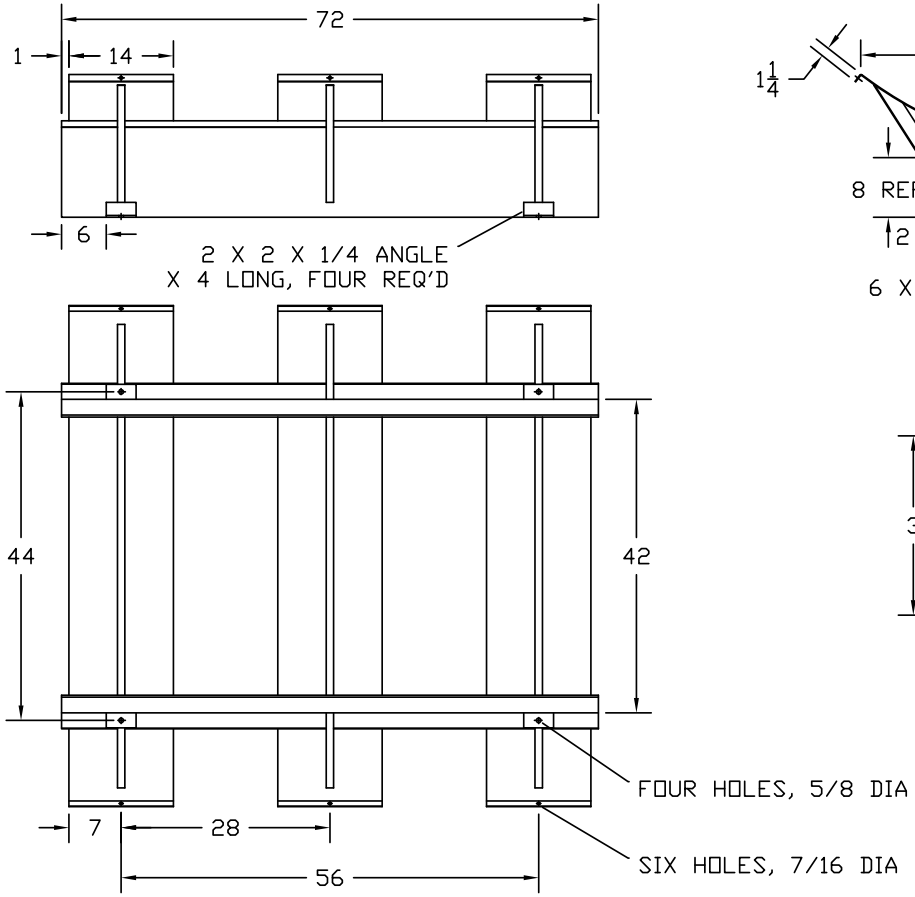

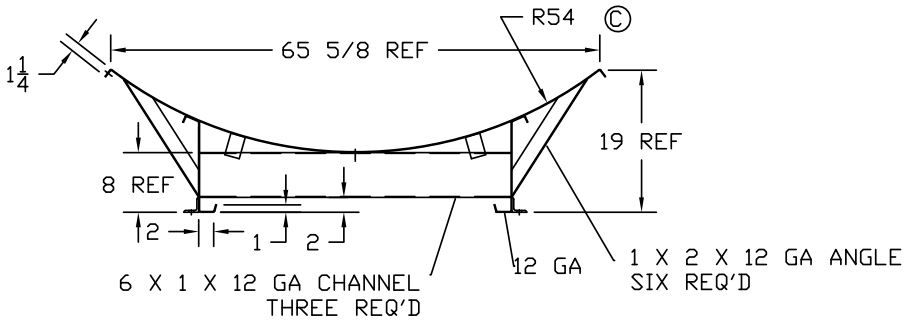

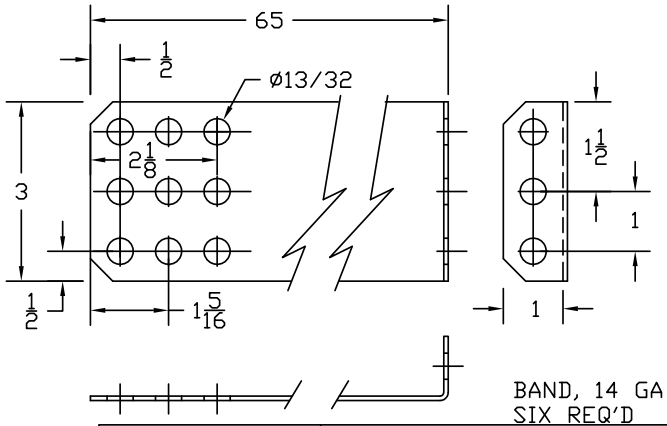

BAND, 14 GA GALV.
SIX REQ'D

NORWESCO
ST. BONIFACIUS, MN

1000 ELLIPTICAL SKID

JTP 18MAR02	SIZE B	FSCM NO.	DWG NO.	REV D
	SCALE 1/16			SHEET

This document contains proprietary information. It is intended solely for the information and use of potential clients involved or to be involved in a transaction with BARR Plastics. Such proprietary information may not be used, reproduced, or disclosed to any other parties for any other purpose without the expressed written permission.