PROPRIETARY DATA

PROPERTY OF ACE ROTO-MOLD MFG., INC. INFORMATION FURNISHED HEREIN IS THE PROPERTY OF ACE ROTO-MOLD MFG., INC AND SHALL NOT BE USED, DISCLOSED TO OTHERS, OR COPIED WITHOUT THE EXPRESSED WRITTEN CONSENT OF ACE ROTO-MOLD MFG., INC. ALL RIGHTS RESERVED.

IN15-ST

H

KEY	PART NUMBER	MATERIAL	DESCRIPTION	QTY.	
1	IN15-ST-1	P05000	TUBING,1/2" PIPE SIZE	3 @ 29 IN (87 IN) (HOLE INCLUDED)	
2	IN15-ST-2	P05000	TUBING, 1/2" SIZE PIPE (HOLE)	1	
3	IN15-ST-3	B0175X10000	FLAT, 3/16x1 MILD STEEL	58.5 IN	
4	12582	62202	1/2" PIPE PLUG	3	E H
5	IN15-ST-5	R03750	3/8" MILD STEEL ROD	3 @ 16.19 IN (49.56 IN)	
6	12080	B01875X1500	FLAT, 3/16 X 1 1/2 MILD STEEL	3 @ 18.56 IN (55.69 IN)	F H
7	J.313X3.000	J.313X3.000	J BOLT, 5/16" X 3"	1	G
8	10280	10280	NUT, 5/16" NYLOK	1	

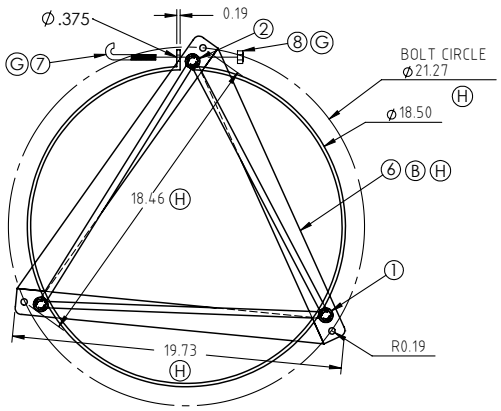

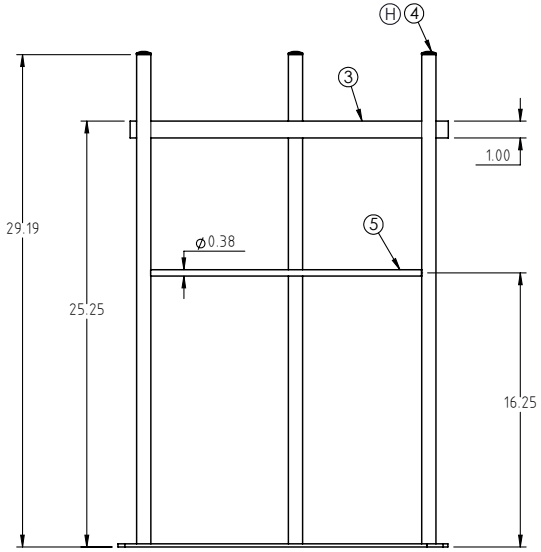

REV	DESCRIPTION	BY / DATE	CCN
H	DIMENSIONS, BASE STRAPS AND LEG PLUGS UPDATED	ADH 10/7/08	1729
G	PARTS 7, 8 AND FINISH NOTE ADDED. WEIGHT UPDATED	ADH 3/20/08	1626
F	DRAWING DIMENSION 18.56 WAS 18.38	ADH 2/19/08	1624
E	CORRECTED PART NUMBER	ADH 10/31/07	1506
D	TOLERANCE WAS 1% @ 68•F	GWC 3/15/07	
C	ADD TANK CLEARANCE DIM.	2/5/07	
B	CHANGE BASE STEEL	9/11/06	
A	CHANGE BOLT CIRCLE ON BASE	DHJ 12/23/04	

ALL DIMENSIONS ARE IN DECIMAL INCHES
TOLERANCES UNLESS OTHERWISE SPECIFIED

DECIMAL ± .125"
FRACTION ± 1/4"
ANGLE ± 1°

DRAWN / DATE: ADH 7/10/07

APPRD. / DATE: REH 10/5/07

MATERIAL

THIRD ANGLE PROJECTION
ANSI 14.5M

NOTES:
1.) POWDER COATING, BLACK TILE, 40012 G
2.) WEIGHT 14.5 LBS

Den Hartog INDUSTRIES, INC.
Ace Roto-Mold Injection Molding Blow Molding Sowjoy
4010 HOSPERS DRIVE S. BOX 425, HOSPERS, IOWA 51238-0421

DESCRIPTION: 15 GALLON INDUCTOR STAND

SCALE: N.S.

PART NO.: IN15-ST

This document contains proprietary information. It is intended solely for the information and use of potential clients involved or to be involved in a transaction with BARR Plastics. Such proprietary information may not be used, reproduced, or disclosed to any other parties for any other purpose without the expressed written permission.