PROPRIETARY DATA

PROPERTY OF ACE ROTO-MOLD MFG., INC. INFORMATION FURNISHED HEREIN IS THE PROPERTY OF ACE ROTO-MOLD MFG., INC.AND SHALL NOT BE USED, DISCLOSED TO OTHERS, OR COPIED WITHOUT THE EXPRESSED WRITTEN CONSENT OF ACE ROTO-MOLD MFG., INC. ALL RIGHTS RESERVED.

INFD30/60-ST

B

KEY	PART NUMBER	MATERIAL	DESCRIPTION	QTY.	
1	INFD30/60-ST-1	P05000	TUBING,1/2" PIPE SIZE	3 @ 37"(111 IN)(HOLE INCLUDED)	
2	INFD30/60-ST-2	P05000	TUBING, 1/2" PIPE SIZE	1	
3	IN30/60-ST-3	B01875X10000	3/16" X 1" MILD STEEL	74.75 IN	
4	12582	62202	1/2" PIPE PLUG	3	B
5	IN30/60-ST-5	R0375	3/8 MILD STEEL ROD	3 @ 20.88"(62.63 IN)	
6	12081	B01875X1500	FLAT, 3/16 X 1 1/2 MILD STEEL	3 @ 22.44"(67.31 IN)	B
7	J.313X3.000	J.313X3.000	J BOLT, 5/16" X 3"	1	A
8	10280	10280	NUT,5/16" NYLOK	1	A

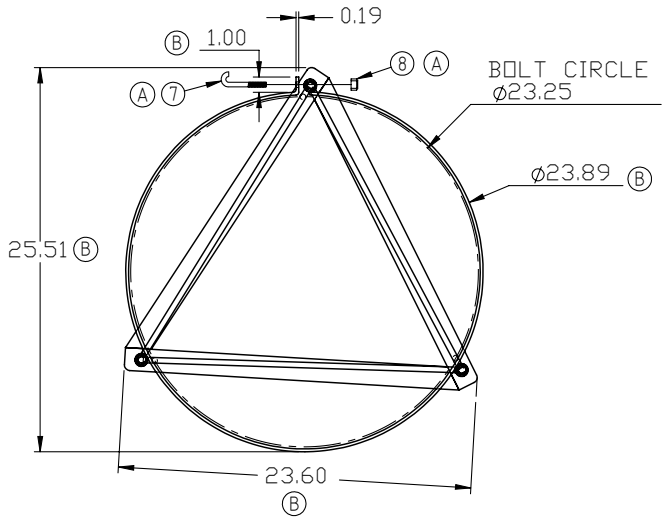

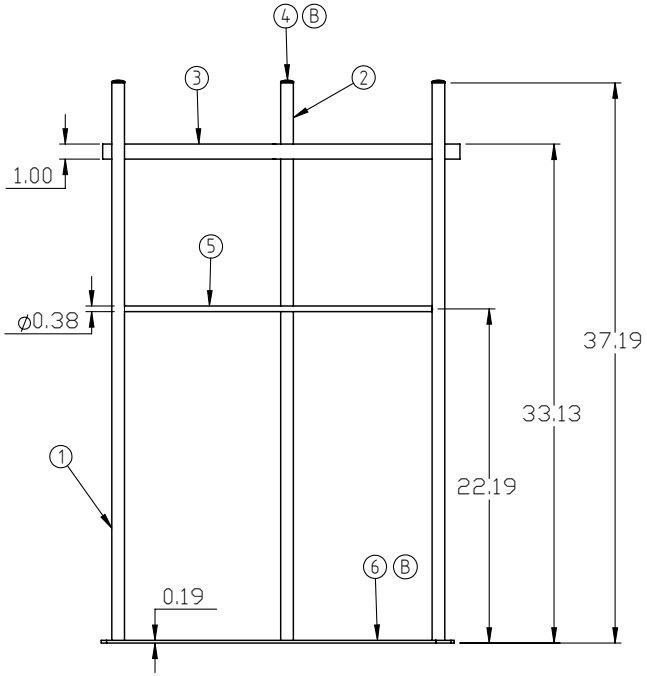

REV	DESCRIPTION	BY / DATE	CCN
B	DIMENSIONS, BASE STRAPS AND LEG PLUGS UPDATED	ADH 10/13/08	1729
A	PARTS 7,8 AND FINISH NOTE ADDED. WEIGHT UPDATED	ADH 3/21/08	1626

DRAWN / DATE: ADH 12/12/07

APPRD. / DATE: REH 12/14/07

MATERIAL

ALL DIMENSIONS ARE IN DECIMAL INCHES
TOLERANCES UNLESS OTHERWISE SPECIFIED
DECIMAL ± .125"
FRACTION ± 1/4"
ANGLE ± 1°

THIRD ANGLE PROJECTION
ANSI 14.5M

NOTES:
1.) POWDER COATING, BLACK TILE, 40012 A
2.) SHIPPING WEIGHT= 18.5 LBS

Den Hartog INDUSTRIES, INC.
Ace Roto-Mold Injection Molding Blow Molding Sowjoy
4010 HOSPERS DRIVE S. BOX 425, HOSPERS, IOWA 51238-0421

DESCRIPTION: INDUCTOR STAND FOR 30/60 GALLON FULL DRAIN TANKS

SCALE: N.S.

PART NO. INFD30/60-ST

This document contains proprietary information. It is intended solely for the information and use of potential clients involved or to be involved in a transaction with BARR Plastics. Such proprietary information may not be used, reproduced, or disclosed to any other parties for any other purpose without the expressed written permission.