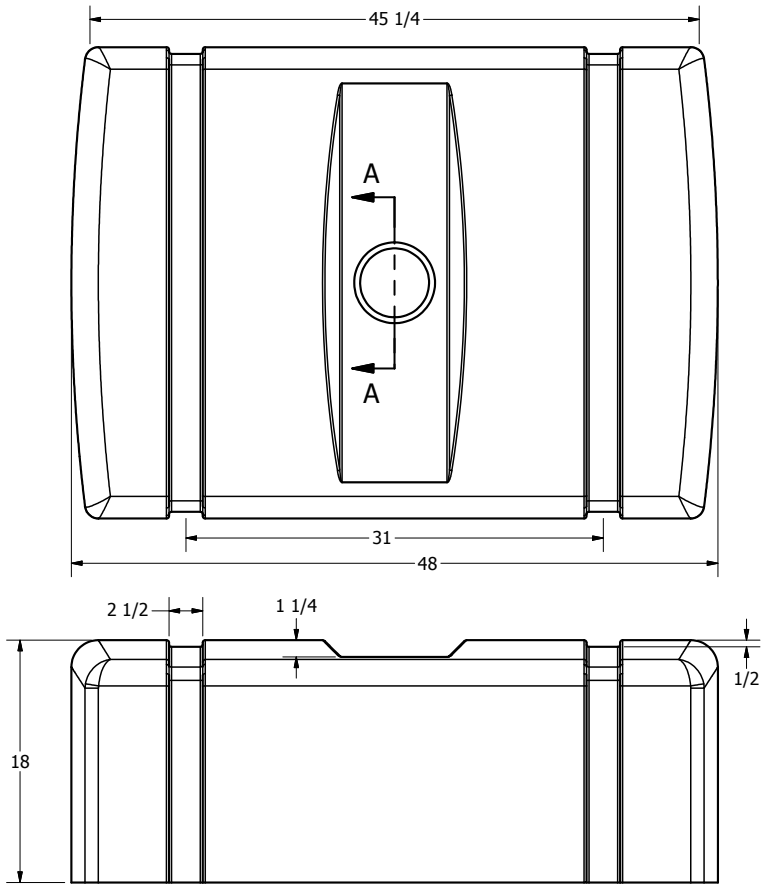

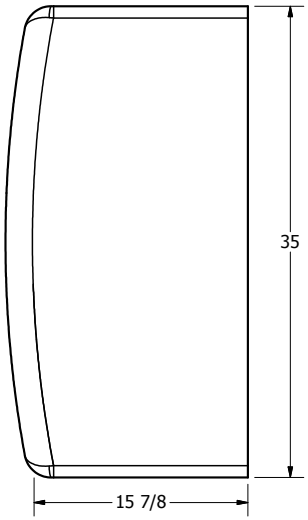

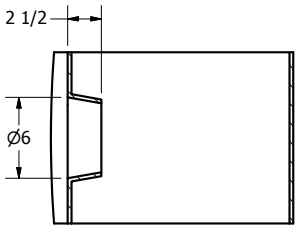

SECTION A-A
SCALE 0.125 : 1

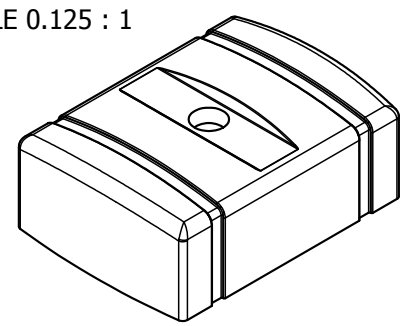

DRAWN Jerry Paulson	11/21/2008	NORWESCO, INC., ST. BONIFACIUS, MN
CHECKED		TITLE
QA		110 GALLON LOW PROFILE UTILITY TANK
MFG		
APPROVED		SIZE B / DWG NO / REV
		SCALE: 1/8 / SHEET 1 OF 1

This document contains proprietary information. It is intended solely for the information and use of potential clients involved or to be involved in a transaction with BARR Plastics. Such proprietary information may not be used, reproduced, or disclosed to any other parties for any other purpose without the expressed written permission.