© DEN HARTOG INDUSTRIES, INC.

Copyright. All information furnished within this document, electronic file or design correspondence is the property of Den Hartog industries, Inc and shall not be used, disclosed to others or copied without the expressed written consent of Den Hartog Industries, Inc.

OP0325-36

A

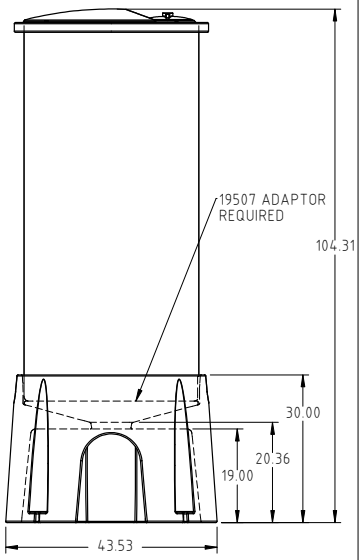

OC036-STP POLY STAND

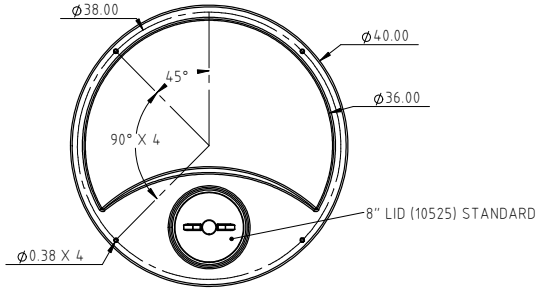

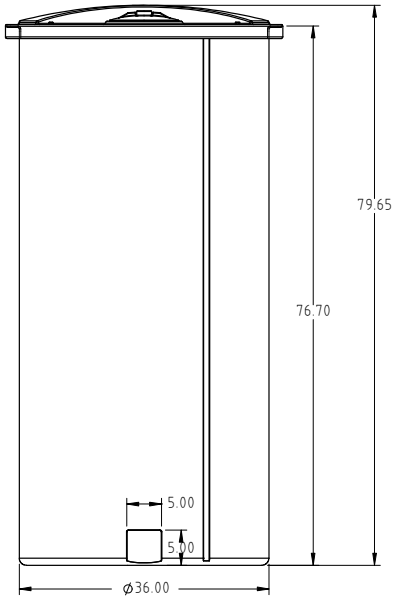

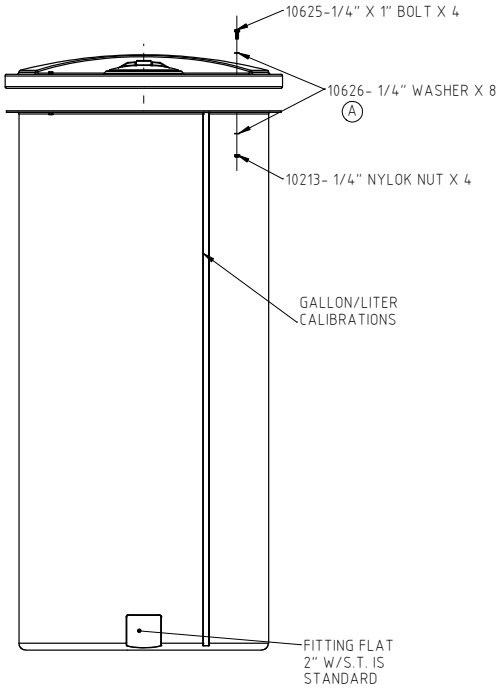

REV	DESCRIPTION	BY / DATE	CCN
A	10626 WAS SJ10067	ADH 10/26/11	2311

ALL DIMENSIONS ARE IN DECIMAL INCHES
TOLERANCES UNLESS OTHERWISE SPECIFIED

POLYETHYLENE ±1% @ 68° F

METAL
DECIMAL ± .125"
FRACTION ± 1/4"
ANGLE ± 1°

THIRD ANGLE PROJECTION ANSI 14.5M

DRAWN / DATE: ADH 2/21/11

APPRD. / DATE: REH 4/18/11

SHOT WEIGHT: 90.00 LBS

SHIPPING WEIGHT: 92.00 LBS

FINISH:

MATERIAL: 10420

NOTES:
1.) 0.22 WALL THICKNESS

Den Hartog INDUSTRIES, INC.
Ace Roto-Mold Injection Molding Blow Molding Sowjoy
4010 HOSPERS DRIVE S. BOX 425, HOSPERS, IOWA 51238-0425

DESCRIPTION: 36" DIA. X 325 GALLON VERTICAL TANK- OPEN TOP

SCALE: N.S.

PART NO.: OP0325-36

This document contains proprietary information. It is intended solely for the information and use of potential clients involved or to be involved in a transaction with BARR Plastics. Such proprietary information may not be used, reproduced, or disclosed to any other parties for any other purpose without the expressed written permission.