NORWESCO
ST. BONIFACIUS, MN

REV

110–30 SADDLE ASSY
150–32 SADDLE ASSY

WT. (LBS) 47.0

DWG NO. **60315**

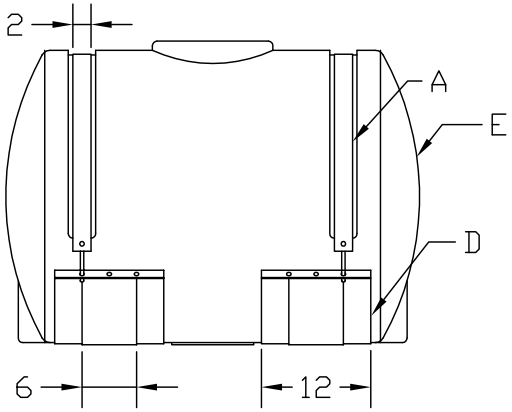

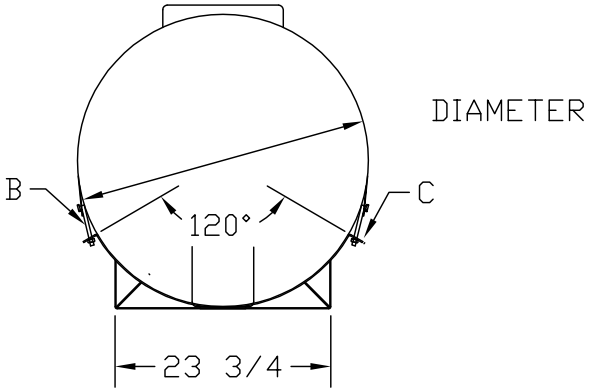

A: TWO NYLON STRAPS X 72" LONG
B: FOUR 3/8" X 4 1/2 L-BOLTS W/ NUT, ZINC PLATED Ⓑ
C: FOUR BUCKLES
D: TWO SADDLES, 11 GA. HRS, BLACK
E: TANK--110 X 30 DIA; 150 X 32 DIA

ALL INFORMATION CONTAINED IN THIS DRAWING IS STRICTLY CONFIDENTIAL AND PROPERTY OF BARR PLASTICS INC. NO PART SHALL BE COPIED OR REPRODUCED WITHOUT THE WRITTEN CONSENT OF BARR PLASTICS INC.

Customer Drawing Approval

Customer _____

Barr Plastic Inc. _____

H:\BPT SALES DWG\TANKS Norwesco_Snyder_Ace\Norwesco\Applicator Tanks\Steel\110_150_32_Saddle.DWG

BARR Plastics Inc.

DATE: 18 AUG 05

PROJECT: – TANK APPROVAL DWG

CLIENT: –

DRAWING REF:

SCALE: –

REV:

MATERIAL SPECIFICATIONS

HDPE 1.5 SPG

ALL FITTINGS ARE POLYPROPYLENE WITH EPDM GASKETS

This document contains proprietary information. It is intended solely for the information and use of potential clients involved or to be involved in a transaction with BARR Plastics. Such proprietary information may not be used, reproduced, or disclosed to any other parties for any other purpose without the expressed written permission.