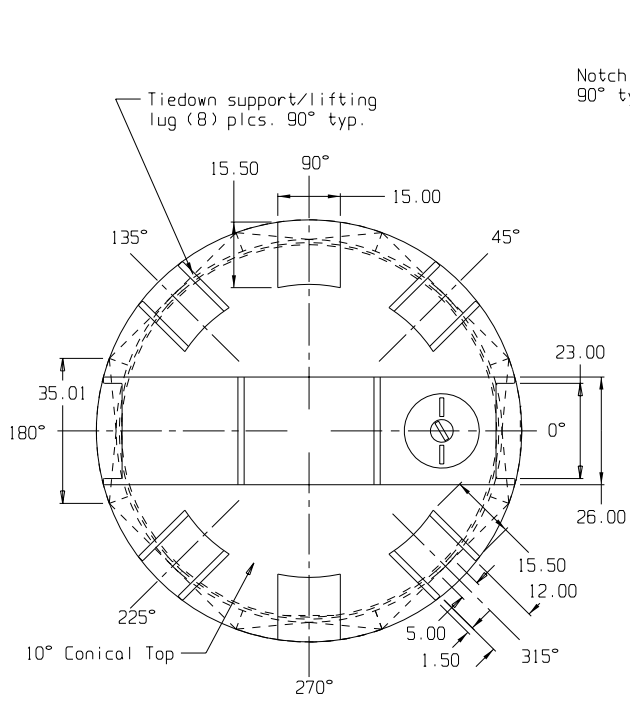

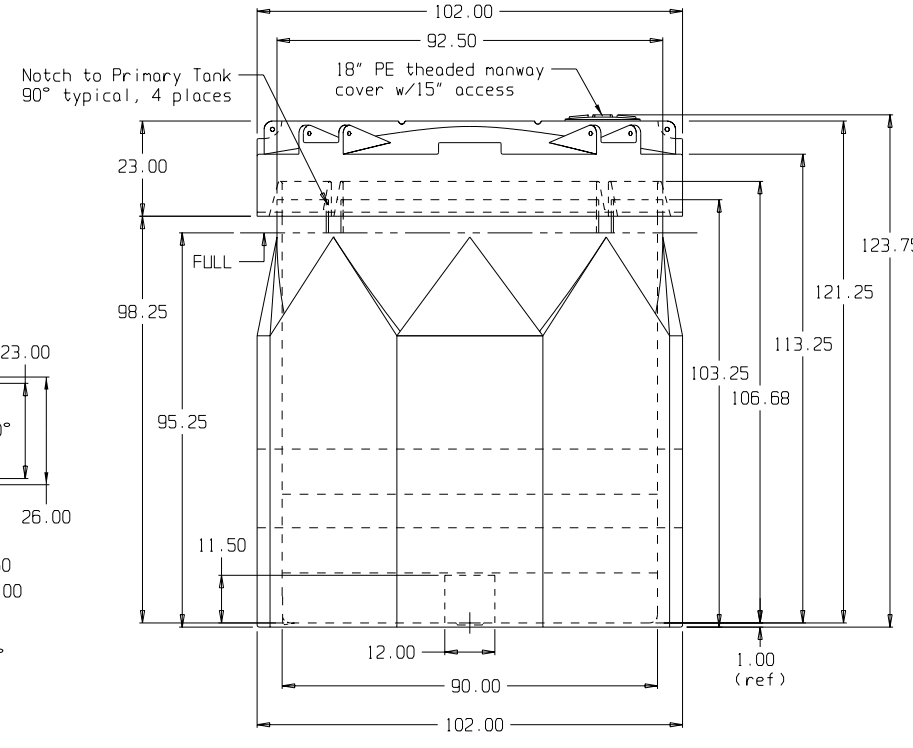

SNYDER INDUSTRIES INC.

(all dimensions in inches)

BASE FITTINGS TO BE LEFT INSTALLED AT TIME OF SHIPMENT PER Sii PROCEDURE

2,500 GALLON CAPTOR CONTAINMENT SYSTEM

PART #	PRIMARY:	5580--
	CONTAINMENT:	5510--
REF#:	0000	07/29/02

This document contains proprietary information. It is intended solely for the information and use of potential clients involved or to be involved in a transaction with BARR Plastics. Such proprietary information may not be used, reproduced, or disclosed to any other parties for any other purpose without the expressed written permission.