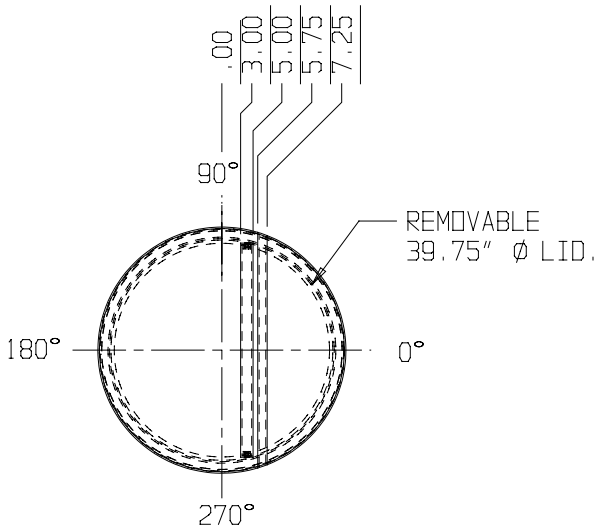

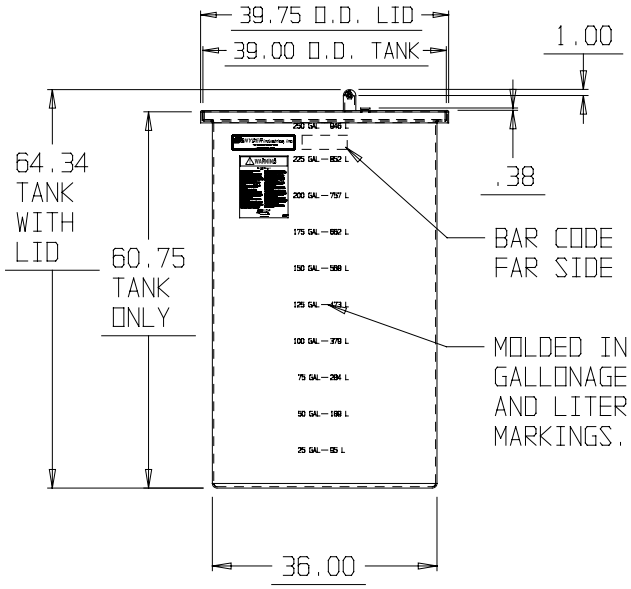

SNYDER INDUSTRIES INC.

* BASE FITTINGS TO BE LEFT INSTALLED AT TIME OF SHIPMENT PER SII PROCEDURE
* Consult Snyder's Guidelines for Use and Installation prior to delivery. Available on-line at www.snydernet.com

(all dimensions in inches)

PART # TANK: 5730000N--L

REF#: 0000 01/05/04

250 GALLON VOT X 36 VERTICAL OPEN TOP TANK

This document contains proprietary information. It is intended solely for the information and use of potential clients involved or to be involved in a transaction with BARR Plastics. Such proprietary information may not be used, reproduced, or disclosed to any other parties for any other purpose without the expressed written permission.