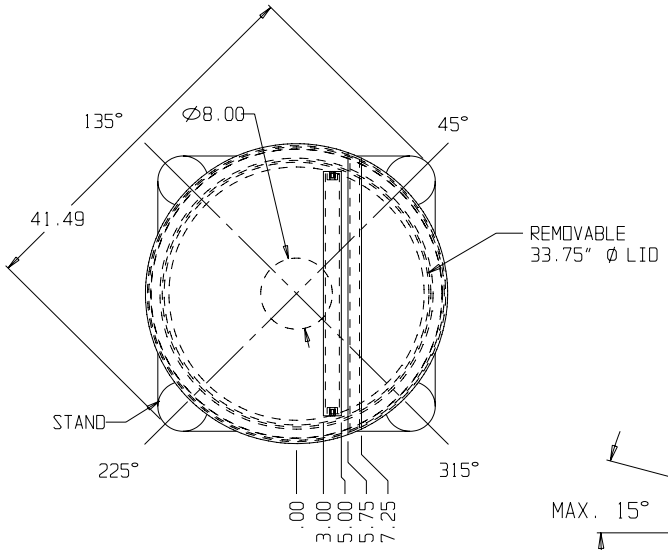

TOP VIEW

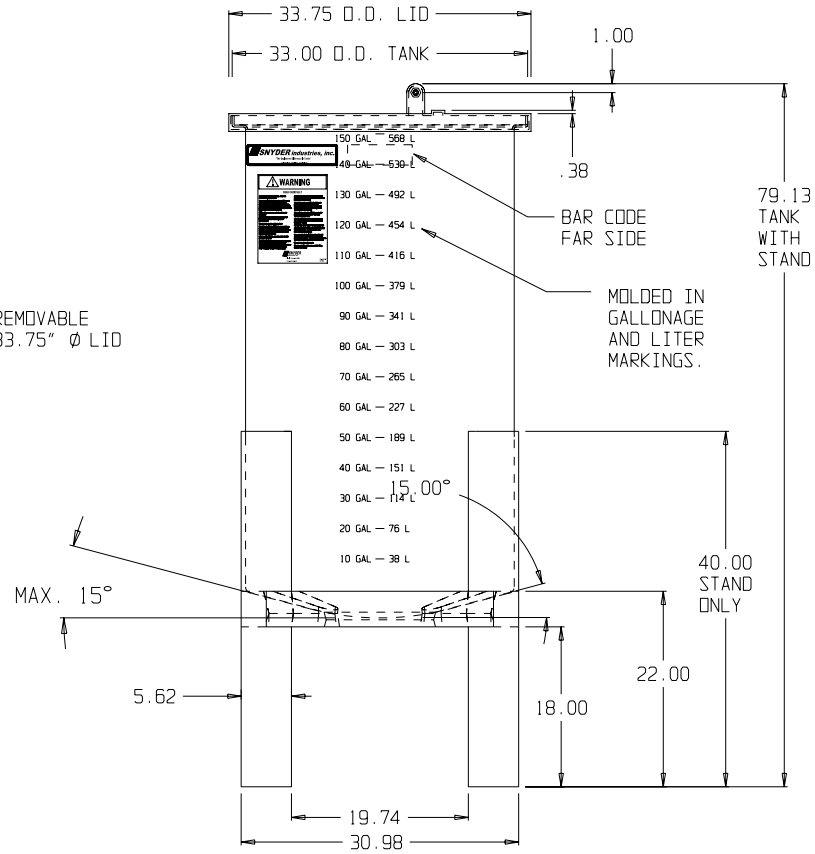

FRONT VIEW

* BASE FITTINGS TO BE LEFT INSTALLED AT TIME OF SHIPMENT PER SII PROCEDURE
* Consult Snyder's Guidelines for Use and Installation prior to delivery.
  Available on-line at www.snydernet.com

PATENT #7,059,575

(all dimensions in inches)

SNYDER INDUSTRIES INC.

150 GALLON OPEN TOP TOTAL DRAIN TANK W/30"x18" STAND

PART # TANK: 5820000N--L

STAND: 1690001N--L

REF#: 0000 01/05/04

This document contains proprietary information. It is intended solely for the information and use of potential clients involved or to be involved in a transaction with BARR Plastics. Such proprietary information may not be used, reproduced, or disclosed to any other parties for any other purpose without the expressed written permission.