REVISION HISTORY				
ZONE	REV	DESCRIPTION	DATE	APPROVED
	T	REMOVE CURRENT MOLDED THRU HOLES AND BUSHINGS	11-12-2009	
	T	ADD ANGLED INWARD RIBS TO BOTTOM HALF OF BOTH ENDS	11/12/2009	
	T	CAP OFF BOTTOM RIBS THAT INTERSECT MOLDED COLUMNS	11/12/2009	

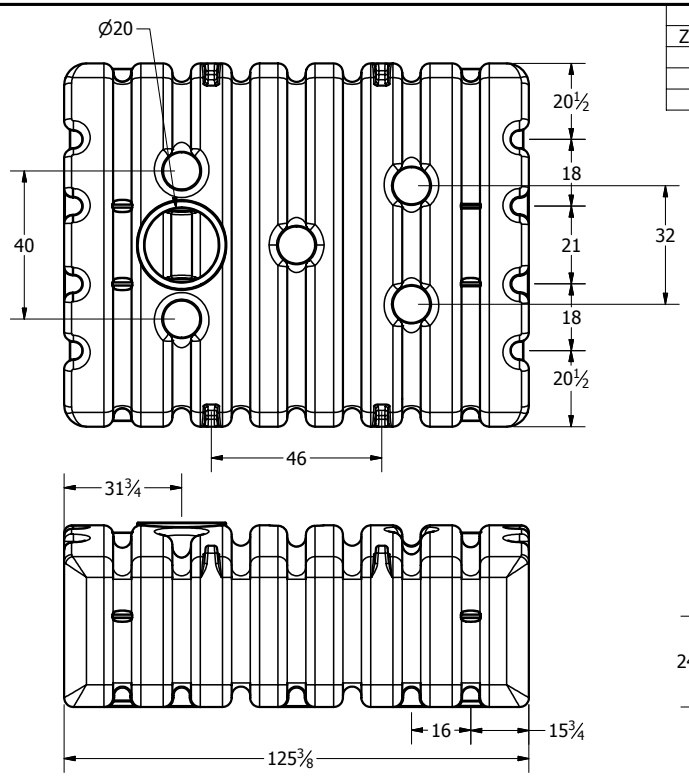

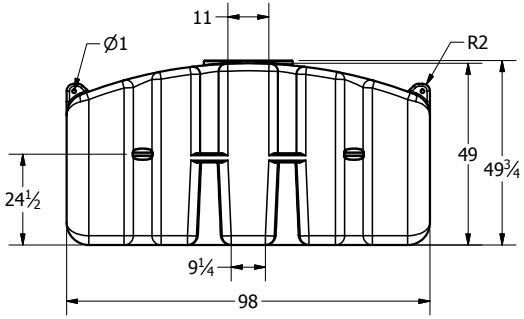

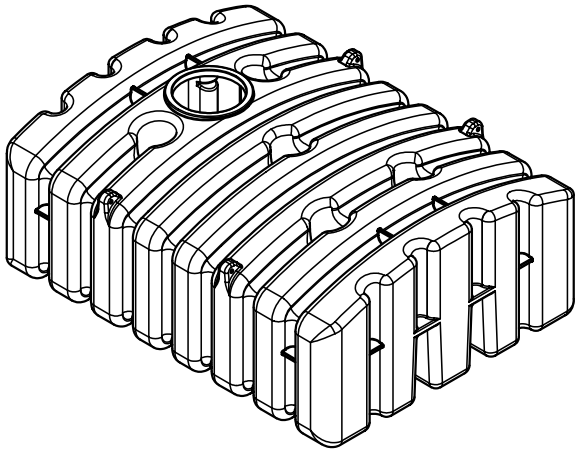

DRAWN Todd Bolzer	10/5/2009	NORWESCO, INC., ST. BONIFACIUS, MN
CHECKED		TITLE
QA		2000 GAL BELOW GROUND HOLDING TANK
MFG		
APPROVED		SIZE B / DWG NO / REV T
		SCALE: 1/16 / SHEET 1 OF 1

This document contains proprietary information. It is intended solely for the information and use of potential clients involved or to be involved in a transaction with BARR Plastics. Such proprietary information may not be used, reproduced, or disclosed to any other parties for any other purpose without the expressed written permission.