© DEN HARTOG INDUSTRIES, INC.

Copyright. All information furnished within this document, electronic file or design correspondence is the property of Den Hartog industries, Inc. and shall not be used, disclosed to others or copied without the expressed written consent of Den Hartog Industries, Inc.

19505 B

KEY	PART NUMBER	DESCRIPTION	QTY.
1	19503	36" HINGED LID-MALE	1
2	19504	36" HINGED LID-FEMALE	1
3	13219	FORMED STIFFENER	1
4	13220	BOLT, 5/16" X 4 3/4"	2
5	10320	WASHER,5/16" FLAT ZINC	4
6	10280	NUT, 5/16" NYLOK ZINC	2
7	10087	BOLT, 1/4" X 3/4" HEX GR5 ZINC	7
8	10626	WASHER, 1/4" FLAT ZINC	7
9	10070	NUT, 1/4" HEX GR 2 ZINC	7

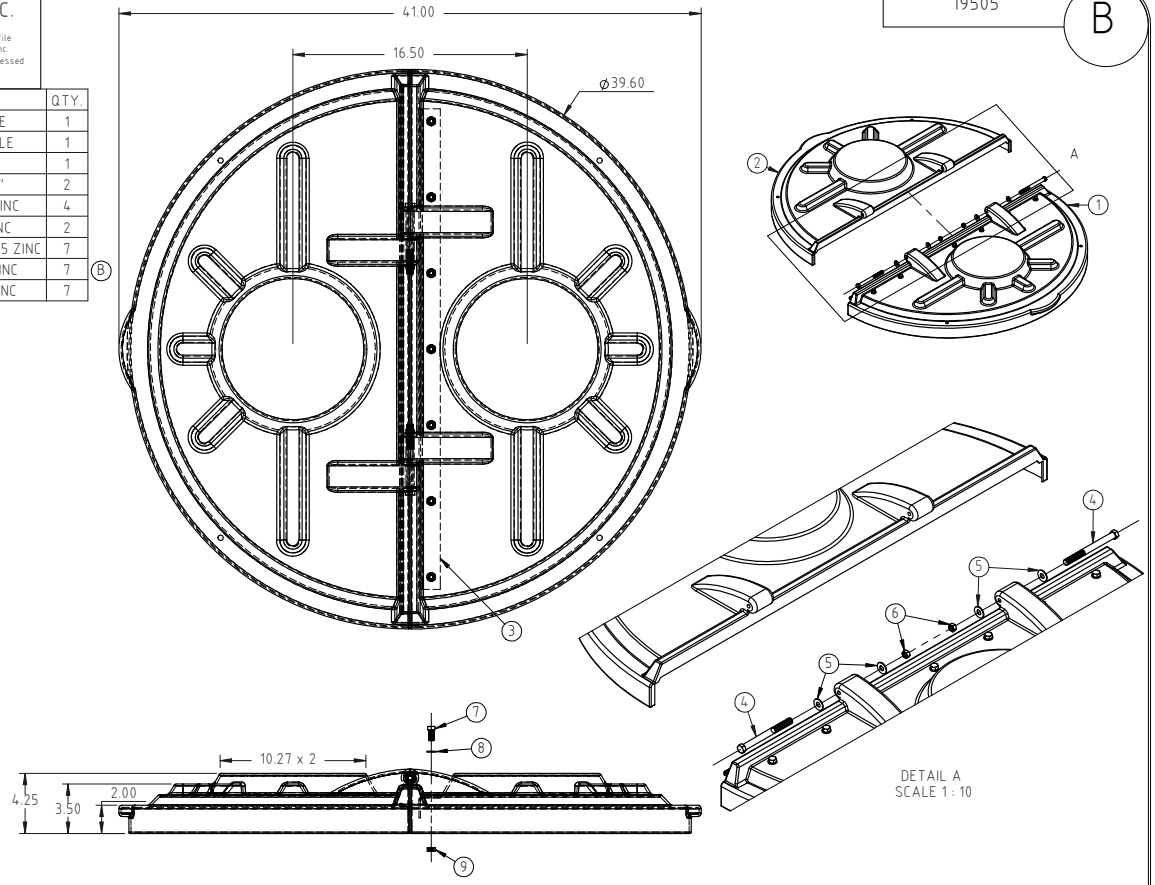

REV	DESCRIPTION	BY / DATE	CCN
B	10626 WAS SJ10067	ADH 10/26/11	2311
A	10070 DESCRIPTION ON THE PRINT CORRECTED	ADH 10/24/11	2313

ALL DIMENSIONS ARE IN DECIMAL INCHES
TOLERANCES UNLESS OTHERWISE SPECIFIED

POLYETHYLENE: ±1% @ 68° F

METAL: DECIMAL ± .125" FRACTION ± 1/4" ANGLE ± 1°

THIRD ANGLE PROJECTION ANSI 14.5M

DRAWN / DATE: ADH 7/16/10

APPRD. / DATE: REH 4/18/11

SHOT WEIGHT:

SHIPPING WEIGHT: 14.00 LBS

FINISH:

MATERIAL

NOTES:

Den Hartog INDUSTRIES, INC.

Ace Roto-Mold Injection Molding Blow Molding Sowjoy

4010 HOSPERS DRIVE S. BOX 425, HOSPERS, IOWA 51238-0425

DESCRIPTION: 36" HINGED LID ASSEMBLY

SCALE: N.S.

PART NO. 19505

This document contains proprietary information. It is intended solely for the information and use of potential clients involved or to be involved in a transaction with BARR Plastics. Such proprietary information may not be used, reproduced, or disclosed to any other parties for any other purpose without the expressed written permission.