REVISIONS				
ZONE	REV	DESCRIPTION	DATE	APPROVED

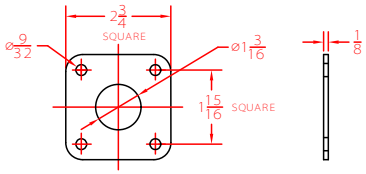

EPDM GASKET P/N 60498
VITON GASKET P/N 60355
1/4 SCALE

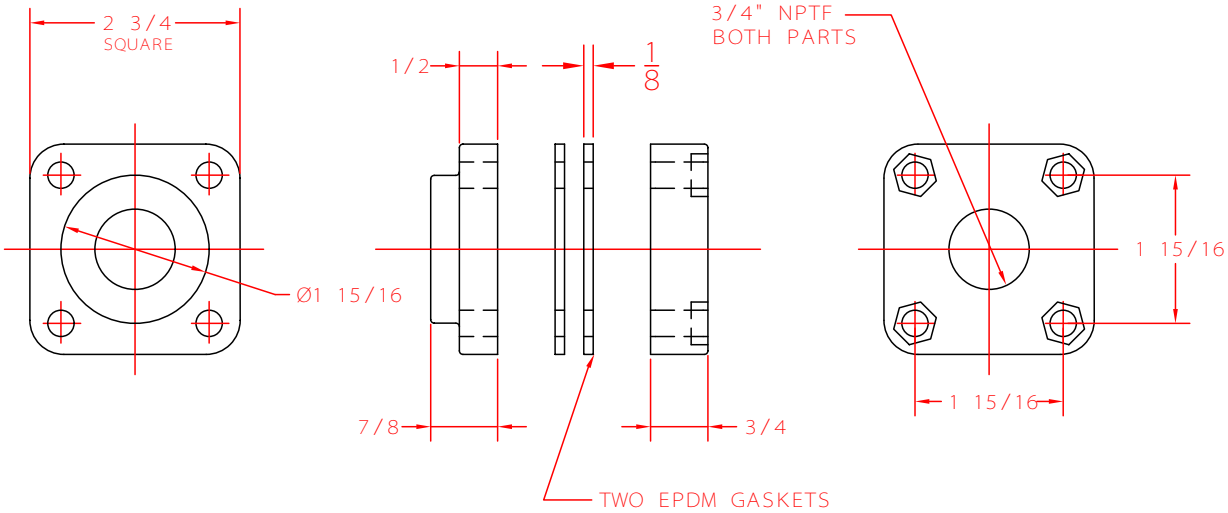

NOTE: INCLUDES (4) SS BOLTS, 5/16" X 2-1/8" W/ NUT & LOCK WASHER

NORWESCO
ST. BONIFACIUS, MN

3/4" POLYPROPYLENE
BOLTED FITTING

JTP 22MAR95	SIZE A	FSCM NO.	DWG NO. 60502	REV
	SCALE 1/2		SHEET	

This document contains proprietary information. It is intended solely for the information and use of potential clients involved or to be involved in a transaction with BARR Plastics. Such proprietary information may not be used, reproduced, or disclosed to any other parties for any other purpose without the expressed written permission.