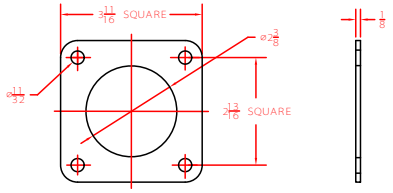

EPDM GASKET P/N 60497
VITON GASKET P/N 60356
1/2 SCALE

REVISIONS				
ZONE	REV	DESCRIPTION	DATE	APPROVED
	A	GASKET WAS 1/4" THK	12NOV98	

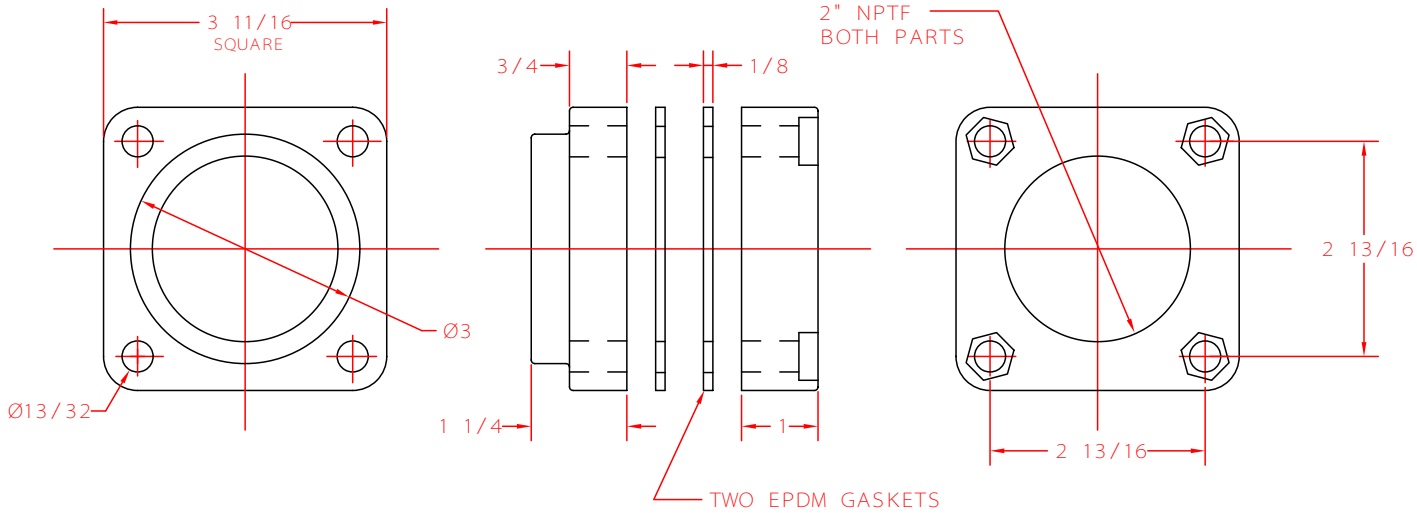

NOTE: INCLUDES (4) SS BOLTS, 3/8" X 2-5/8" W/ NUT & LOCK WASHER

NORWESCO
ST. BONIFACIUS, MN

2" POLYPROPYLENE
BOLTED FITTING

JTP 22MAR95	SIZE A	FSCM NO.	DWG NO. 60516	REV A
	SCALE 1/2		SHEET	

This document contains proprietary information. It is intended solely for the information and use of potential clients involved or to be involved in a transaction with BARR Plastics. Such proprietary information may not be used, reproduced, or disclosed to any other parties for any other purpose without the expressed written permission.