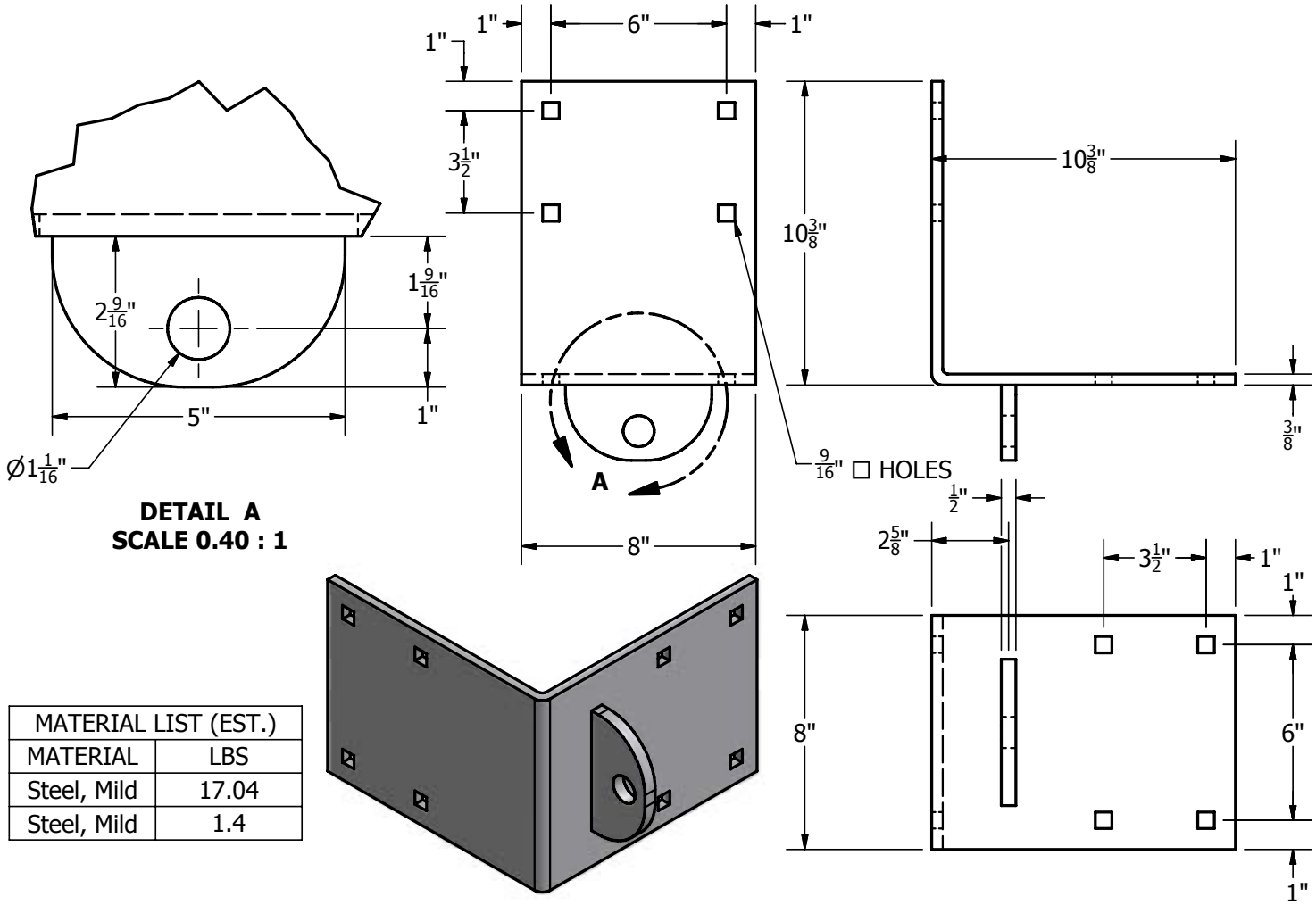

MATERIAL LIST (EST.)	
MATERIAL	LBS
Steel, Mild	17.04
Steel, Mild	1.4

		Part No: H-OCM-HD	Scale: 1/5
			Drawn By: D .OTTO
		Date: Dec-29-09 2:24pm	Approved By: J. MERIWETHER

This document contains proprietary information. It is intended solely for the information and use of potential clients involved or to be involved in a transaction with BARR Plastics. Such proprietary information may not be used, reproduced, or disclosed to any other parties for any other purpose without the expressed written permission.