GRAF	D EcoBloc maxx Endplatte		Artikel-Nr. article no. 402203
	GB EcoBloc maxx end plate	ES EcoBloc maxx placas laterales	FR EcoBloc maxx parois

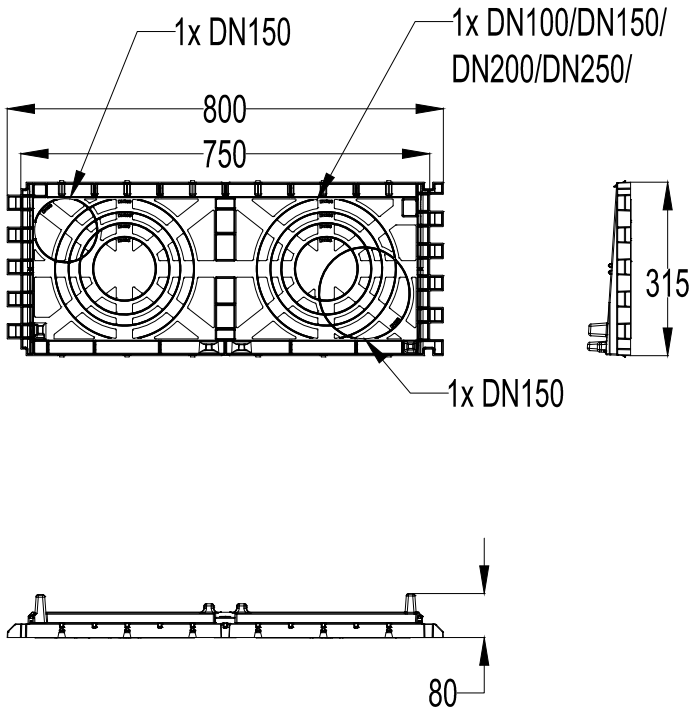

This document contains proprietary information. It is intended solely for the information and use of potential clients involved or to be involved in a transaction with BARR Plastics. Such proprietary information may not be used, reproduced, or disclosed to any other parties for any other purpose without the expressed written permission.